HENRY M. HIRATA
DIRECTOR

COUNTY OF SAN JOAQUIN
DEPARTMENT OF PUBLIC WORKS

P.O. BOX 1810 - 1810 E. HAZELTON AVENUE
STOCKTON, CALIFORNIA 95201
(209) 468-3000

ENCROACHMENT PERMIT

E.P. No. 97-268-SE

7-31-97
(Date Issued)

12-1-97
(Expiration Date)

73079-17
(Job No.)

To: Pacific Bell
P. O. Box 3929, Room 20
Modesto, CA 95352

Encroachment type: Install Pole & Apparatus Box

Location: w/s Van Allen Rd. 92'
n/o State Hwy 120

In compliance with your request of 7-30, 1997, permission is her by granted to do work in County right of way as shown on attached application and subject to all the terms, conditions and restrictions written below or printed as general or special provisions on any part of this form. See reverse side and attached sheet, if any.

Trench excavations for service connections will not be permitted within ten feet (10') of pavement centerline unless otherwise approved by the Director. Surface of trench patches shall match in kind and be smooth and even with that of abutting surface. Special attention shall be given to depth of utilities through roadside area in anticipation of future drainage facilities, road profile and/or frontage development. All underground utility facilities are to be established and accurately dimensioned on sketches from surveyed centerline of road right of way, not from right of way (border) lines.

The Department of Public Works, Field Inspection Section shall receive a notice at least forty-eight (48) hours prior to beginning any work within the County right of way. All work performed under this permit shall conform to the rules and regulations pertaining to safety established by the California Division of Industrial Safety and Cal-OSHA.

The jobsite shall be kept in a safe condition at all times by the daily removal of any excess dirt or debris which might be a hazard to either pedestrian or automobile traffic. All necessary traffic convenience and warning devices and personnel shall be provided, placed and maintained by and at the sole expense of the Permittee in accordance with the latest edition of the CALTRANS Manual of Traffic Control.

After completion of the work permitted herein, all debris, lumber, barricades, or any excess material shall be removed and the jobsite left in a neat workmanlike manner. Immediately following completion of construction permitted herein, Permittee shall fill out and mail notice of completion provided by Grantor.

Est. Permit Fee: $ 90.00

FORMS: SS/WW, R-29

HENRY M. HIRATA, Director
Department of Public Works

By R. Gallaher
Permit Section

WHITE - Permittee
GOLDENROD - PWD Central File
YELLOW - Field Inspection
PINK - Permit Section

PW 27

GENERAL PROVISIONS

1. This permit is issued under and subject to all laws and ordinances of agencies governing the encroachment herein permitted. See the following references:

STREETS AND HIGHWAYS CODE

1. Division 1, Chapter 3
2. Division 2, Chapter 2, Section 942
3. Division 2, Chapter 4, Section 1126
4. Division 2, Chapter 6

SAN JOAQUIN COUNTY ORDINANCES NUMBERED: 324, 441, 648, 662, 672, 695, 700, 860 and 892.

2. It is understood and agreed by the Permittee that the doing of any work under this permit shall constitute an acceptance of all the provisions contained herein and failure on the permittee's part to comply with any provision will be cause for revocation of this permit. Except as otherwise provided for public agencies and franchise holders, this permit is revocable on five days' notice.

3. All work shall be done subject to the supervision of and to the satisfaction of the grantor. The Permittee shall at all times during the progress of the work keep the County Highway in as neat and clean a condition as is possible and upon completion of the work granted herein, shall leave the County Highway in a thoroughly neat, clean and usable condition.

4. The Permittee agrees by the acceptance of this permit to properly maintain any encroachment structure placed by the Permittee on any part of the County Highway and to immediately repair any injury to any portion of the highway, which occurs as a result of the maintenance of the said encroachment structure, until such time as the Permittee may be relieved of the responsibility of such maintenance of the encroachment structure by the County Department of Public Works.

5. The Permittee also agrees by the acceptance of this permit to make, at its own expense, such repairs as may be deemed necessary by the County Director of Public Works or his representative.

6. It is further agreed by the Permittee that whenever construction, reconstruction or maintenance work upon the highway may require, the installation provided for herein shall, upon request of the County Department of Public Works, be immediately moved by and at the sole expense of the Permittee.

7. No material used for fill or backfill in the construction of the encroachment shall be borrowed or taken from within the County right of way.

8. All work shall be planned and carried out so that there will be as little inconvenience as possible to the traveling public. No material shall be stacked within eight feet (8') of the edge of the pavement or traveled way unless otherwise provided herein. Adequate provision shall be made for the protection of the traveling public. Barricades shall be placed, with approved signs and lights at night, and flagmen shall be employed, all as may be required by the particular work in progress.

9. The Permittee, by the acceptance of this permit, shall assume full responsibility for all liability for personal injury or damage to property which may arise out of the work herein permitted or which may arise out of the failure of the part of the Permittee to do the work provided for under this permit. In the event any claim of such liability is made against the County of San Joaquin or any department, official or employee thereof, the Permittee shall defend, indemnify, and hold them and each of them harmless for such claim.

10. All backfill material is to be moistened as necessary and thoroughly compacted with mechanical means. If required by the County Director of Public Works, such backfill shall consist of gravel or crushed rock. The Permittee shall maintain the surface over structures placed hereunder as may be necessary to insure the return of the roadway to a completely stable condition and until relieved of such responsibility by the County Department of Public Works. Wherever a gravel, crushed rock or asphalt surfacing is cut or damaged in the work of placing an encroachment structure, such material shall either be separately stored and replaced in the roadway as nearly as possible in its original state or shall be replaced in kind, and the roadway shall be left in at least as good a condition as it was before the commencement of operations of placing the encroachment structure.

11. Whenever necessary to secure permission from abutting property owners, such abuthority must be secured by the Permittee prior to starting work.

12. The future safety and convenience of the traveling public shall be given every consideration in the location and type of construction.

APPLICATION FOR ENCROACHMENT PERMIT

PLEASE PRINT:

Date _____

To: San Joaquin County Highway Department.

Pacific Bell Engineering
(Applicant Name)

P.O. Box 3929, Room 20
(Mailing Address)

Modesto CA 95352
(City, State Zip Code)

209/549-5825
(Area Code - Telephone Number)

OFFICE USE ONLY

JOB # 73079-3 REF# _____
APN ___ - ___ - ___ CRV# _____
EXP. DATE 12-1-97
VALID 8-1-97 TO 12-1-97 D~~RIVEWAYS~~:
STREET Van Allen Rd. * _____
AREA Escalon QUAD SE * _____
TYPE Cross Connect box installation
FORMS SS/WW, R-29
NOTE _____

Sketch (Detailed plans may be submitted)

See attached map

The undersigned hereby applies for permission to excavate, construct and / or otherwise encroach on County Highway Right-of-Way on the west side of Van Allen Rd. approximately 92 (feet) / mile north of State Hwy 120, _____, by performing the following work: (description of work): a apparatus box (cross connect box) cable from pole to cabinet. The cabinet is 8' from the edge of pavement. They will place 10 feet of 4 inch diameter conduit from serving area (cross connect box) to the existing pole 6 feet south. of the box

Work will commence on or about 8-1 for approximately 120 days.

I the undersigned certify that I am the owner of the respective property, or am qualified to represent the owner and agree to do the work described above in accordance with the rules, regulations of San Joaquin County and subject to inspection and approval.

_____ SIGNATURE OF APPLICANT - TITLE

_____ DATE

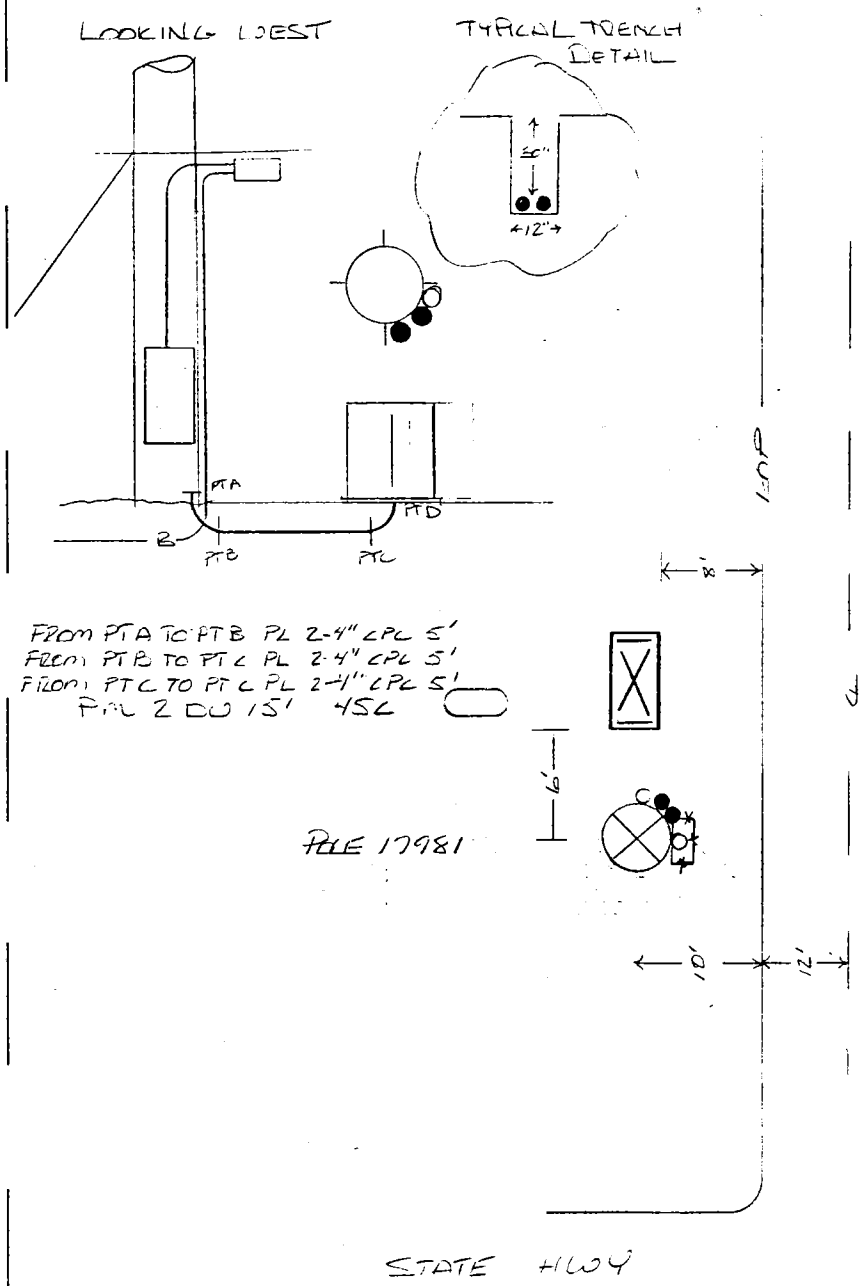

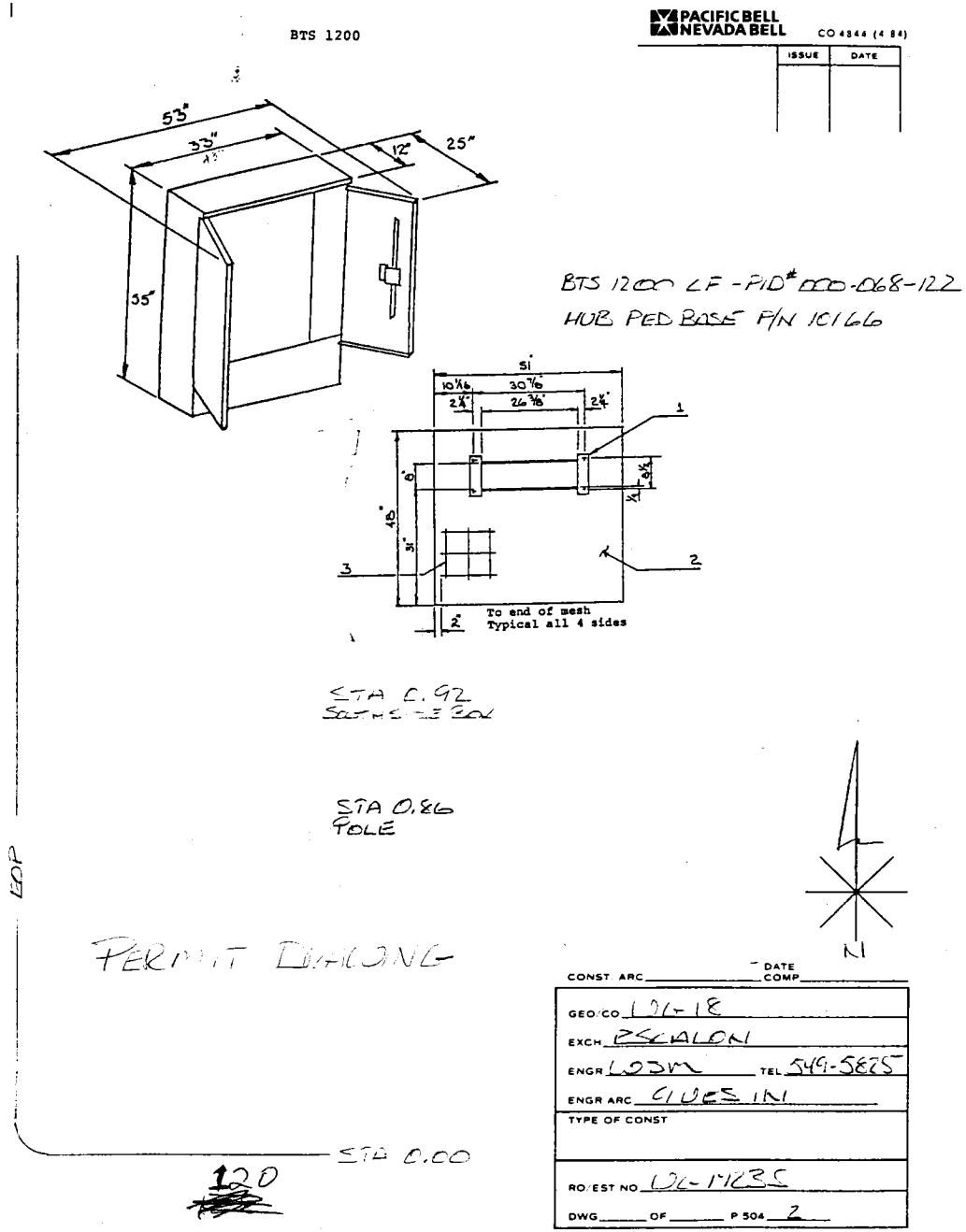

PACIFIC BELL
NEVADA BELL
CO 4844 (4 84)

ISSUE	DATE

CONST. ARC _____ DATE COMP _____

GEO/CO LOL-18

EXCH ESCALON

ENGR LOSM TEL 549-5825

ENGR ARC CLUES IN

TYPE OF CONST

RO/EST NO LOL-1425

DWG ____ OF ____ P 504 2

N169616